Digitalis
EDUCATION SOLUTIONS, INC.

P.O. Box 2976
Bremerton, WA 98310 USA
tel +1.360.616.8915
fax +1.360.616.8917
DigitalisEducation.com

Digitarium Epsilon System Placement

The diagrams and formulas below will help determine approximately where to position a fixed or portable system in your dome. With a fixed system, you will need to bolt the frame to a solid support in the center of your dome at the appropriate height for projection onto your dome.

The lens height, B, is approximately 32” (81.3cm) on a fixed system and 33.5” (85cm) on a portable system.

(A) Full dome coverage (typical fixed usage)

For full dome coverage, the lens is placed below the springline (bottom edge) of the dome:

H = R * tan(12.5 degrees) = 0.222 * R, where R is the dome radius.

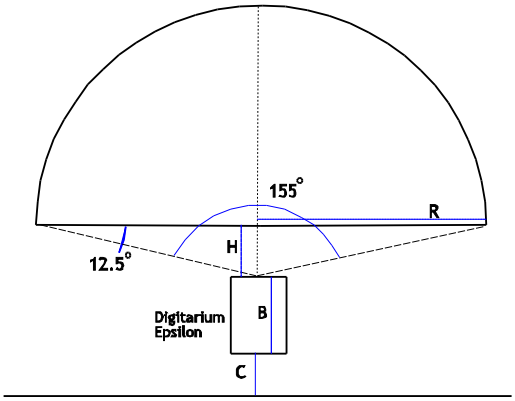

(B) Lens at dome center (typical portable usage)

For configuration (B), the lens is simply placed at the springline of the dome.

This configuration is usually seen in portable domes with a typical low springline or where space constraints do not allow configuration (A).

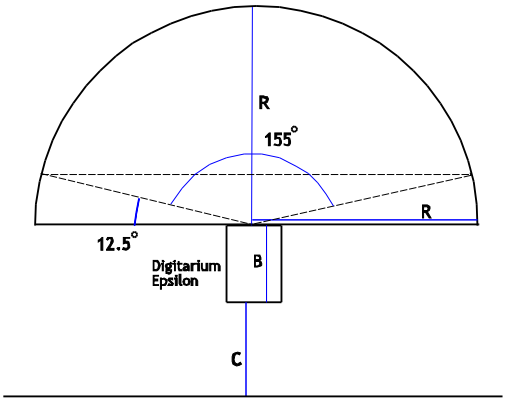

(C) Truncated projection (180°x155°)
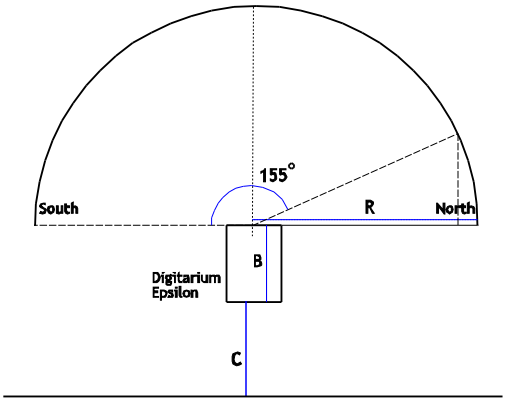
For a truncated (higher resolution) configuration, the north edge of the projection is cut off. In this configuration the lens should be placed at the height of the springline.